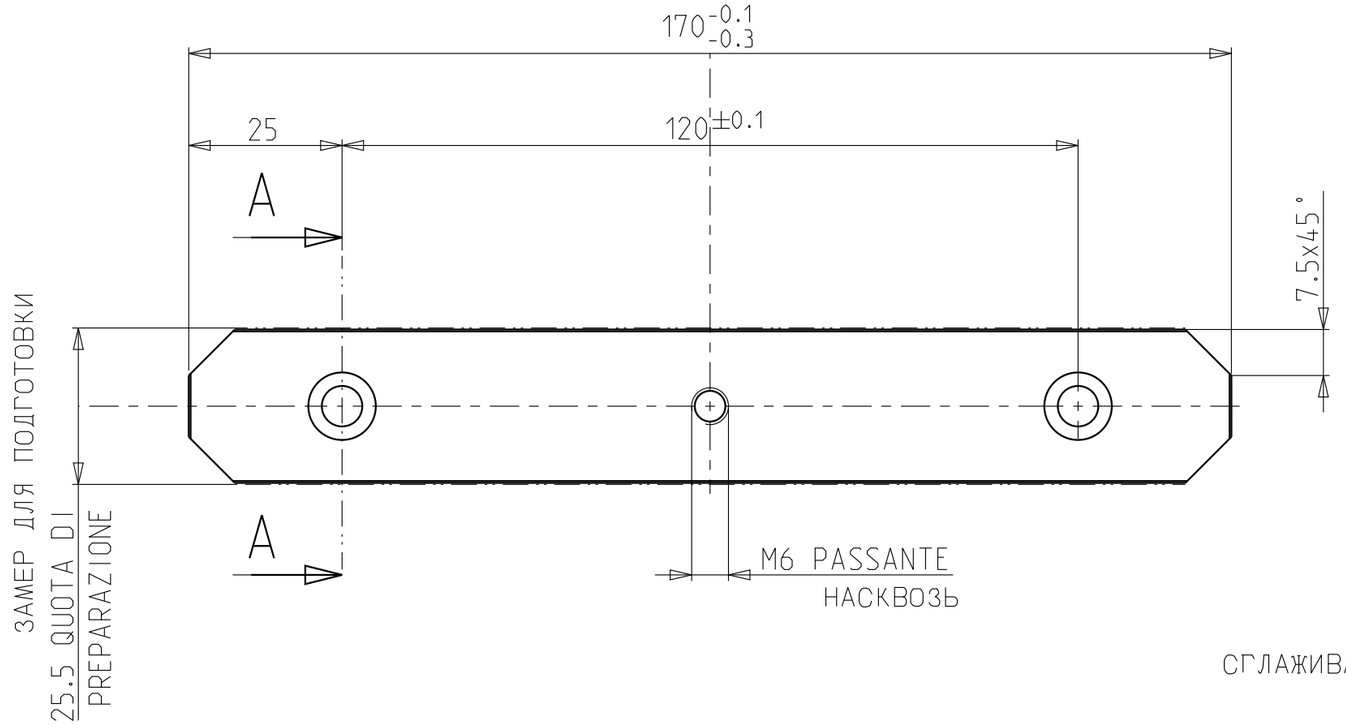

Заказ №114
СК6П1300.022.405 Шпонка

PROPRIETARY AND RESERVED
ИСКЛЮЧИТЕЛЬНОЙ СОБСТВЕННОСТИ

Smussi non quotati 0.3x45°
СГЛАЖИВАНИЕ НЕ УКАЗАНО НА ЧЕРТЕЖЕ 0.3 *45

SEZIONE A-A
SCALA 2:1
СЕКЦИЯ A:A
ШКАЛА 2:1

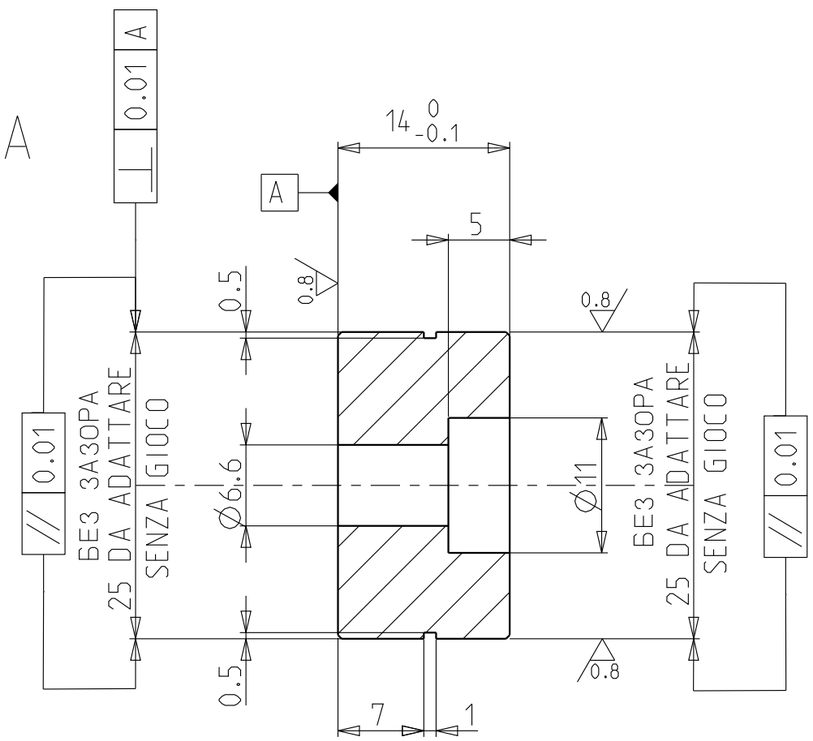

ШПОНКА 170x25x14

ЦЕМЕНТИРОВАНИЕ И ЗАКАЛИВАНИЕ
ГЛУБИНА
ТВЕРДОСТЬ

CEMENTAZIONE E TEMPRA :
PROFONDITA' 0.4÷0.6 [mm]
DUREZZA HRC 60 ±2

ЗАЩИЩАТЬ РЕЗЬБОВОЕ ОТВЕРСТИЕ
ОТ ТЕПЛОВОЙ ОБРАБОТКИ

NB: PROTEGGERE IL FORO FILETTATO
DAI TRATTAMENTI TERMICI

REV. REV.	DATA DATA	FIRMA SIGNATURE	OGGETTO DELLA MODIFICA / SUBJECT OF MODIFICATION
.	.	.	.
.	.	.	.
.	.	.	.
.	.	.	.
.	.	.	.

MAT. MAT.	18NiCrMo5 UNI EN 10084-UNI8788 Сталь 20ХН ГОСТ 4543-71	DISEGNATO / DRAWN BY: R.PIANTA	DATA/DATE: 19.02.18
TRATT. TERMICO HEAT TREATMENT	SUL GREZZO / ROUGH COMP. -	APPROVATO / APPR. BY: M.ANGELI	DATA/DATE: 19.02.18
	IN LAVOR. / MACH.COMP. ЦЕМЕНТИР. И ЗАКАЛИВ. CEM. E TEMPRA	SCALA / SCALE	1:1

CARATT. MECCAN. MECHANICAL SPECS.	PESO Kg WEIGHT Kg	TOLLERANZE GENERALI LAVORAZ. GENERAL MACHINING TOLERANCES			
		100	>100 <300	>300 <1000	FORI/HOLES
HRC: -	GREZZO/ROUGH	±0.20	±0.30	±0.40	H12
HB: -	0.4	TOLL. PARTI FUSE/TOL. OF CAST PIECES SPESSORI/THICKNESSES ± 10%			
R: - N/mm²		SPESSORI/THICKNESSES <10mm ±1mm			

SEGNI DI LAVORAZ / MACHINING MARKS
GENERALE / GENERAL: 3.2
ALTRE LAVORAZIONI / OTHER MACHINING: 0.8

THIS DRAWING IS OF EXCLUSIVELY PROPERTY OF
INNSE BERARDI company
BRESCIA - ITALY
ACCORDING TO THE LAW IT IS PROHIBITED TO REPRODUCE IT OR TO PASS IT TO COMPETITORS OR TO THIRD PARTIS WITHOUT EXPLICIT AUTHORIZATION FROM INNSE BERARDI COMPANY

LINGUETTA 170x25x14	DISEGNO N. / DRAWING NO. F44520363	REV. --	FOGLIO N. / SHEET NO. 1/1	FORMATO / SIZE A3
DENOMINAZIONE - DETAIL	ERA - -	SIMILE		