Data	Descrizione	Disegnatore	Indice
03/06/2021	MODIFICHE AI TRATTAMENTI ABI	L. GARCIA	A

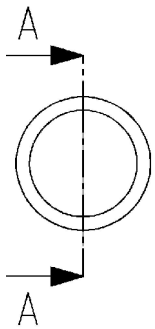

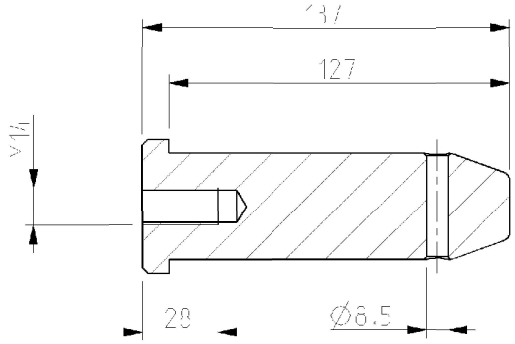

SECTION A A

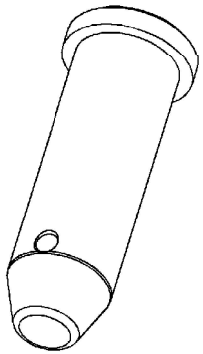

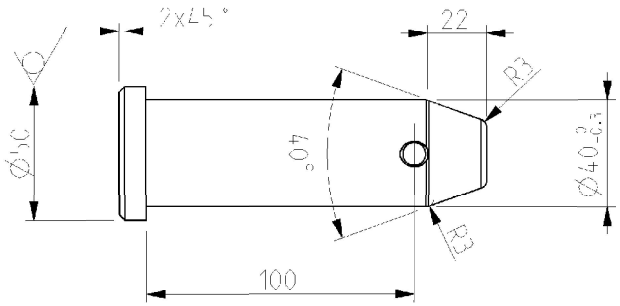

For the supply of materials and undestructive tests, follow **DRILLMEC ST21** specification.
Perform the resilience test at -45 °C, according to **DRILLMEC ST21** specification.

TO BE PRINTED:
- DRILLMEC LOGO
- ITEM CODE
- MANUFACTURE DATE

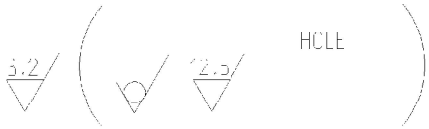

HEAT TREATMENT

QUENCHING AND TEMPERING (UNI EN 10083/3)		A
Hardness	HB 250-295	A
Yield Strength	N/mm2 685	A
Ultim. Tens. Strength	N/mm2 880-1080	A
Quench. & Temp.	Raw Roughed. RAW	
INDUCTION HARDENING		
Hardness	HRC	
Effective Depth	mm	

BLANK PICKING UP

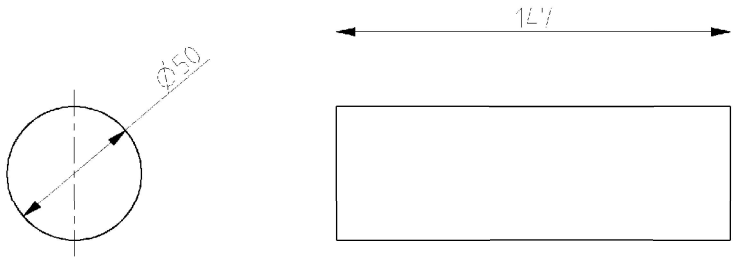

A 08190050	TONDO/ROUND BAR D.50	39NiCrMo3B	2.5
REV CODICE/CODE	DESCRIZIONE/DESCRIPTION	MATERIA	PESO/WEIGHT (Unit:kg)

TOLLERANZE GENERALI/GENERAL TOLERANCE: DIMENSIONI/DIMENSIONS -2 mm; SCOST. TAV.ROC./RADIUS WORK DIMS. linear/whole order ±1 mm; 1 decimale/1 decimal ±0.5 mm; 2 decimali/2 decimals ±0.2 mm; SMUSSI/CHAMFERS ±0.5 mm; ANGOLI/ANGLES ±0.50 gradi/degrees	TRATTAMENTO/HEAT. TREAT.	–	CARATT. MATERIALE/MATERIAL SPEC.	
	BONIFICA/HARD.-TEMP.		DUREZZA SUPERFICIALE/HARDNESS HRC	
	RICOPERTURA/COATING	–	PROFONDITA' EFFICACE/DEPTH mm	–
	FINISH SUPERF./FINISHING	–	RES. RUOTTURA/STRENGTH N/mm2	880-1080
PESO/WEIGHT (kg) 2.5	MACCHINA TIPO/MACHINE TYPE –	GRUPPO/GROUP –	STATO/STATE DESIGN	
DRILLMEC DRILLING TECHNOLOGIES	DISEGNATO/DRAWN DATE 05/06/2021 DA/FROM ASOTEC	CONTROLLATO/CONTROLLED DATE 06/08/2021 DA/FROM E.RA MONDI	REVISIONE/VER. A; FOGLIO/SHEET 1 di 1	SCALA/SCALE 1:2
DENOMINAZIONE/DENOMINATION P N 3.40 KJ=90 LOW T. -45°C			NUMERO CODICE/CODE NUMBER 54025340	