HEAT TREATMENT

HARDENING AND TEMPERING (UNI EN 10083/1)		
Surface Hardness	HB	260-340
Yield Point Rp	N/mm2	685
Ultimate Tensile Strength R	N/mm2	880 1080
Hardening & Tempering on	Bank Rough-Machined	Bank

CASE HARDENING AND TEMPERING		
Surface Hardness	HRC	-
Effective Depth	mm	-

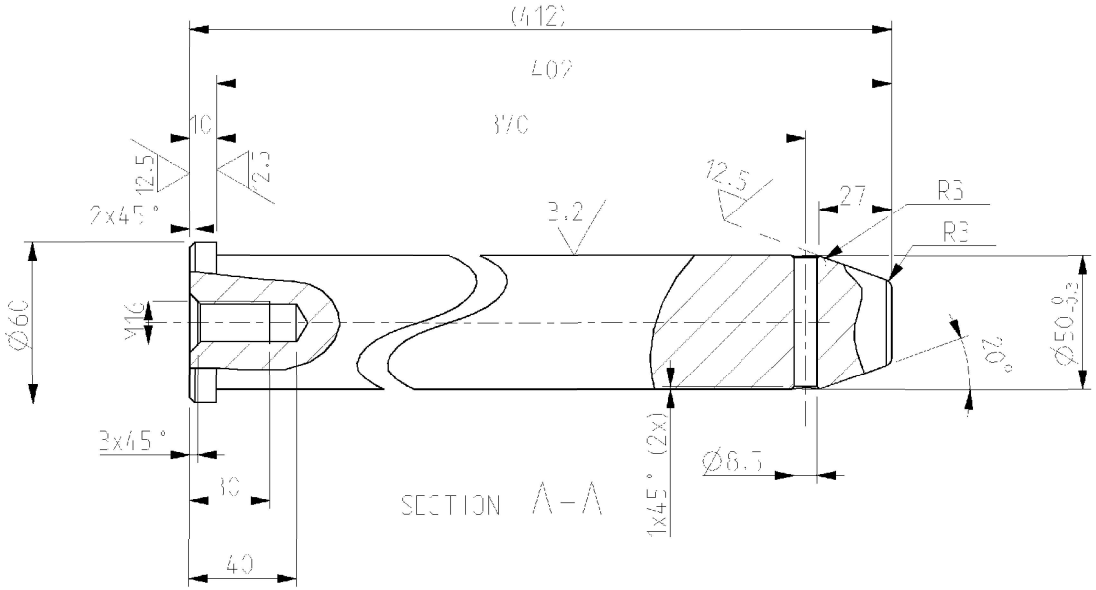

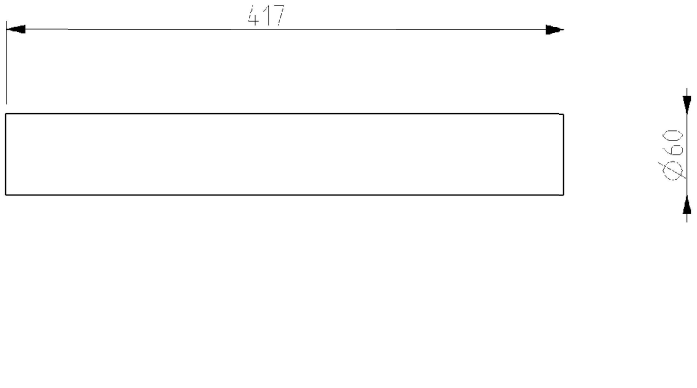

ELECTROLYTIC GALVANIZING
THK.=0.05mm

TO BE PRINTED:
- DRILLMEC LOGO
- ITEM CODE
- MANUFACTURE DATE

For the supply of materials and undestructive tests, follow DRILLMEC ST21 specification.
Perform the resilience test at -45°C, according to DRILLMEC ST21 specification.

0	08190060	TONDO/ROUND BAR D.60	39NiCrMo3B / 5.7
REV	CODICE/CODE	DESCRIZIONE/DESCRIPTION	MATERIALE / PESO/WEIGHT (Unit:kg)

TOLLERANZE GENERALI/GENERAL TOLERANCE	TRATTAMENTO/HEAT. TREAT.	-	CARATT. MATERIALE/MATERIAL SPEC.
DIMENSIONI/DIMENSIONS	BONIFICA/HARD.-TEMP.		DUREZZA SUPERFICIALE/HARDNESS HRC
	RICOPRITURA/AVVIAMENTO	-	PROFONDITA' EFFICACE/DEPTH mm -
	FIN.SUPERF./FINISHING	-	RES. NOMINALE/STRENGTH N/mm2 -
PESO/WEIGHT (kg) 5.7	MACCHINA TIPO/MACHINE TYPE -	GRUPPO/GROUP -	STATO/STATE DESEN

DRILLMEC DRILLING TECHNOLOGIES	DISEGNATO/DRAWN DATE 06/08/20 DA/FROM ASOTEC-	CONTROLLATO/CONTROLLED DATE 10/08/20 DA/FROM RABALLO- A.	REVISIONE/VER. 0 FOGLIO/SHEET 1 di 1 SCALA/SCALE 1:2

DENOMINAZIONE/DENOMINATION	NUMERO CODICE/CODE NUMBER
PIN 60x402 T.-45°C	54025309